Lab 4: An Arduino Function Generator

Eric Chen, Ethan Yang

The main objective of this lab is to simulate three wave functions using the Arduino: a square, a triangle, and a sine wave. Using Lab 3's code, we can accurately record these signals generated by the Arduino. The code used to record the data is as follows:

```
const int numSamples = 100;
int sensorValue1[numSamples];
int sensorValue2[numSamples];
int sensorValue3[numSamples];

void setup() {
  Serial.begin(115200);
  tone(8, 1000);
  bitClear(ADCSRA, ADPS0);
  bitClear(ADCSRA, ADPS1);
  bitSet(ADCSRA, ADPS2);
}

void loop() {
  for (int i = 0; i < numSamples; i++) {
      sensorValue1[i] = analogRead(A0);
  }

  for (int i = 0; i < numSamples; i++) {
      sensorValue2[i] = analogRead(A1);
  }

  for (int i = 0; i < numSamples; i++) {
      sensorValue3[i] = analogRead(A2);
  }

  for (int i = 0; i < numSamples; i++) {
    Serial.print(sensorValue1[i]);
    Serial.print(",");
    Serial.print(sensorValue2[i]);
    Serial.print(",");
    Serial.println(sensorValue3[i]);
  }
```

```
}
```

To accurately generate the three wave functions, we implement the following circuit designs.

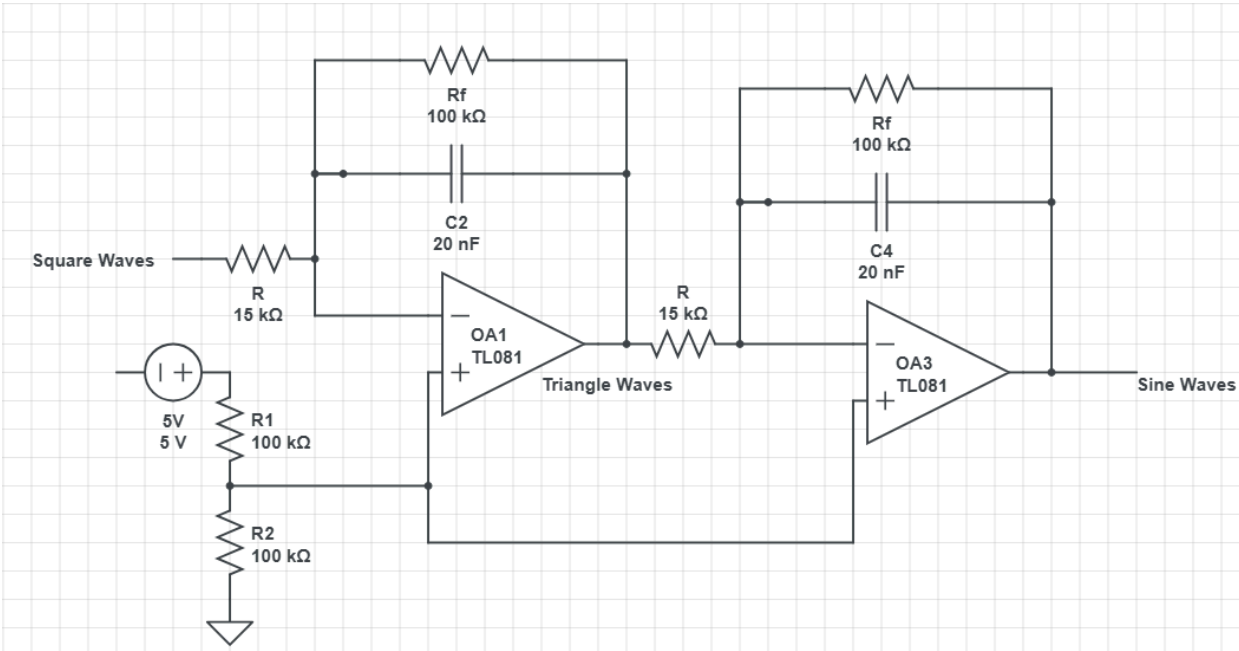

Implementing the circuit, the following data can be recorded from the Arduino.

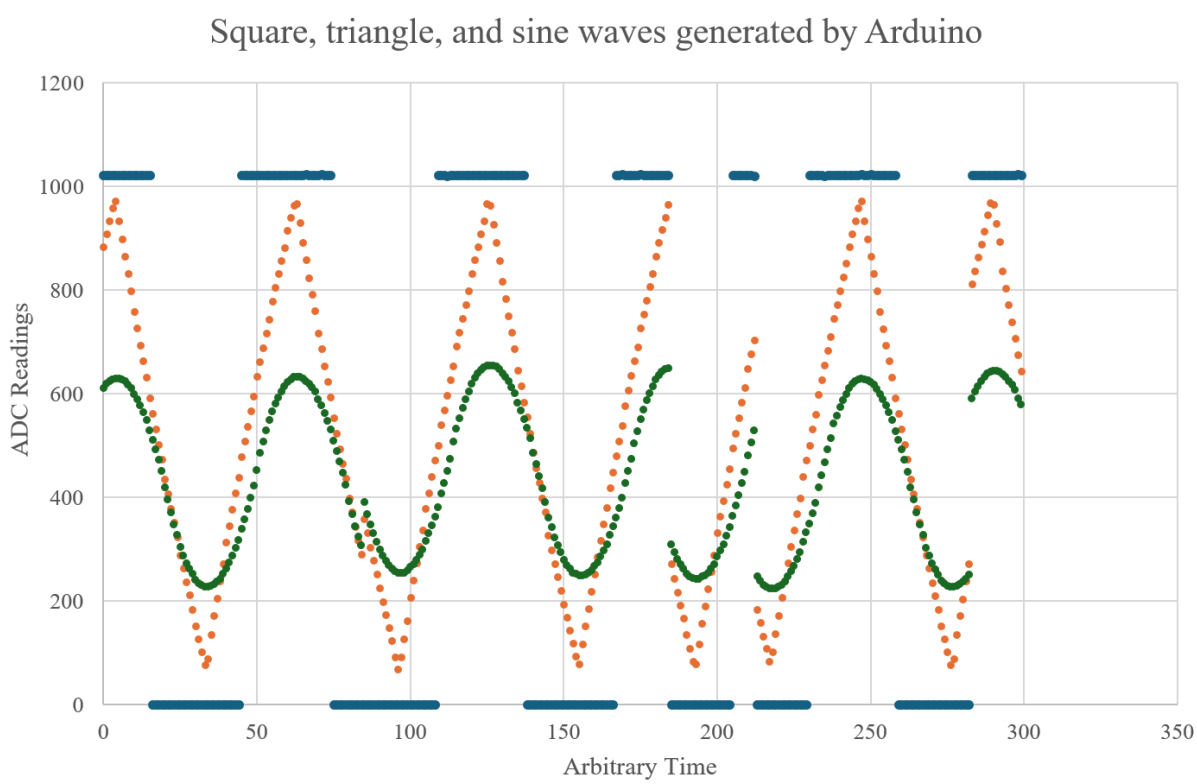

The blue dots give the square waves; orange as the triangle waves; and green as the sine wave. The Arduino's ADC readings on the y-axis can be converted into voltage (V) by dividing it by 1023 and multiplying by 5. This also indicates that the peaks of the square waves are exactly 5V and the minimum of the plot is at 0V. According to theory, the square wave should alternate between 0-5V because it came directly from the Arduino's digital output. The triangle and sine waves should both be centered around 2.5V, or 512 in ADC readings, because the voltage divider created a center voltage of 2.5V from the 5V power supply. Our results match this theory. Furthermore, notice that there are some breakpoints in the data. This is simply the Arduino not transmitting data in those spots, and it is not an issue with the circuit.

Now, to compare empirical with theoretical values, we used Fourier series to approximate our theoretical values. Per Problem 15, the square waves can be represented as a sum of many cosine waves. When it passed through the first integrator, each term of the sum is multiplied by the gain of the first integrator, $\frac{1}{\omega C_1 R}$, where $\omega = 2(2n+1)\pi f$. Then, the output of the first integrator, or the theoretical amplitude of the triangle waves, is

$$\frac{2A}{\pi^2 f C_1 R} \sum_{n=0,1,2...} \frac{(-1)^n}{(2n+1)^n} cos(2(2n+1)\pi f t)$$

Given $A = 2.5V,\ f = 1000Hz,\ R = 15k\Omega,\ C_1 = 0.02\mu F$, we can approximate the amplitude to be about 2.1V. From our data, the triangle wave ADC is around 80 to 970, so our measured amplitude is around 2.17V, which is quite close to our theoretical value.

To find the second integrator, we can find the magnitude of the output by multiplying the gain of the second integrator by the triangle wave output, but we can simply the math by accepting a fractional error of $\frac{1}{27}$. By doing so, ignoring the first term, the amplitude can be simplified into: $Amplitude = \frac{A}{\pi^3 f^2 C_1 C_2 R^2} \approx 0.90V$, where $C_2 = 0.02\mu F$. The ADC reading for the sine waves cycles around 230 to 640, which gives us a measured amplitude of about 1.00V, which is also quite close to the theoretical value.